DIREKTRONIK
Data products out of the ordinary

High Power Dual Output Injector
Typical Application

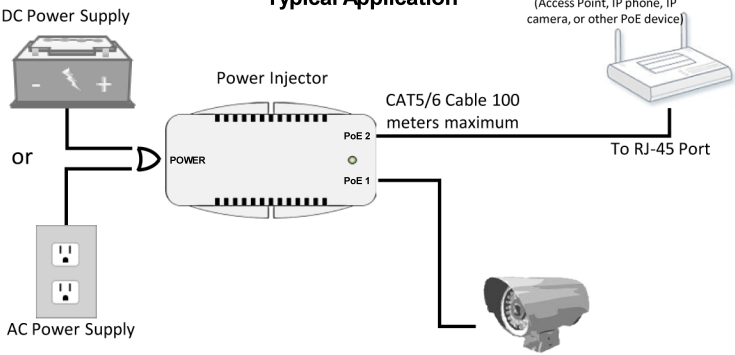

WARNING!
Ensure the correct Voltage compatibility before connecting your device. Connecting injector output directly to non PoE devices may cause serious damage!

High Power Dual Output Injector
Typical Application

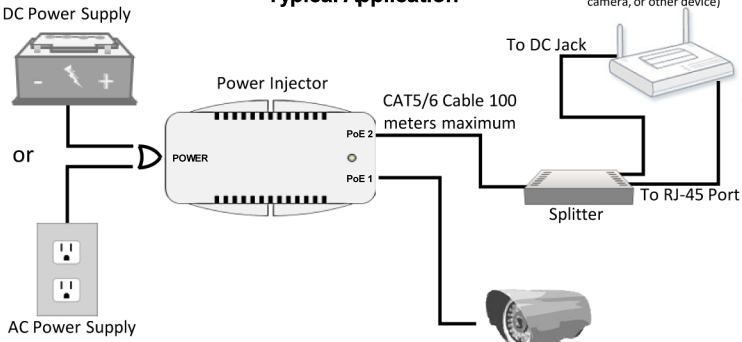

WARNING!
Ensure the correct Voltage compatibility before connecting your device. Connecting injector output directly to non PoE devices may cause serious damage!